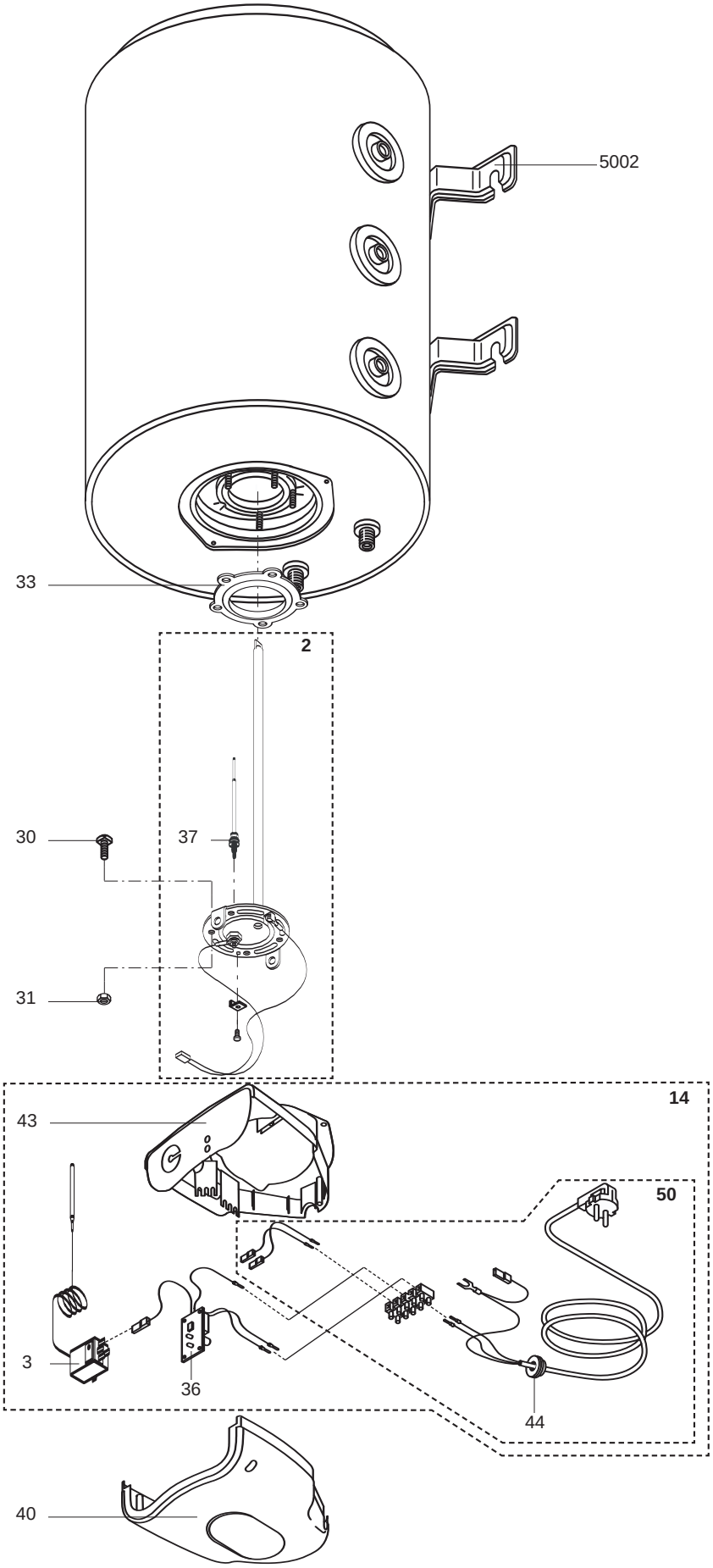
5002
33
2
30
37
31
14
43
50
3
36
44
40

Key N	Description	Manf. Pt. N	Other	Type	BRDN - BRGN 75	BRDN - BRGN 100	BRDN - BRGN 150	BRDN - BRGN 200		Manf. date from	Manf. date to
0002	FLANGE PLATE (COMPLETE WITH ANODE)	65101338			■	■	■	■			
0003	THERMOSTAT (IMIT)	921058			■	■	■	■			
0014	COMPLETE PLASTIC COVER	925352			■	■	■	■			
0030	SCREW (M8X25)	918001			■	■	■	■			
0031	NUT (M8)	918004			■	■	■	■			
0033	FLANGE GASKET (5 STUD)	924001			■	■	■	■			
0036	P.C.B. (ANODE - PROTECH)	925348			■	■	■	■			
0037	ANODE (PROTECH)	340406			■	■	■	■			
0040	PLASTIC COVER	926299			■	■	■	■			
0043	CONTROL PANEL	926298			■	■	■	■			
0044	CABLE PACK	926283			■	■	■	■			
0050	WIRING KIT	935344			■	■	■	■			
5000	**ACCESSORIES**										
5002	WALL FIXING BRACKET	912006			■	■	■	■			